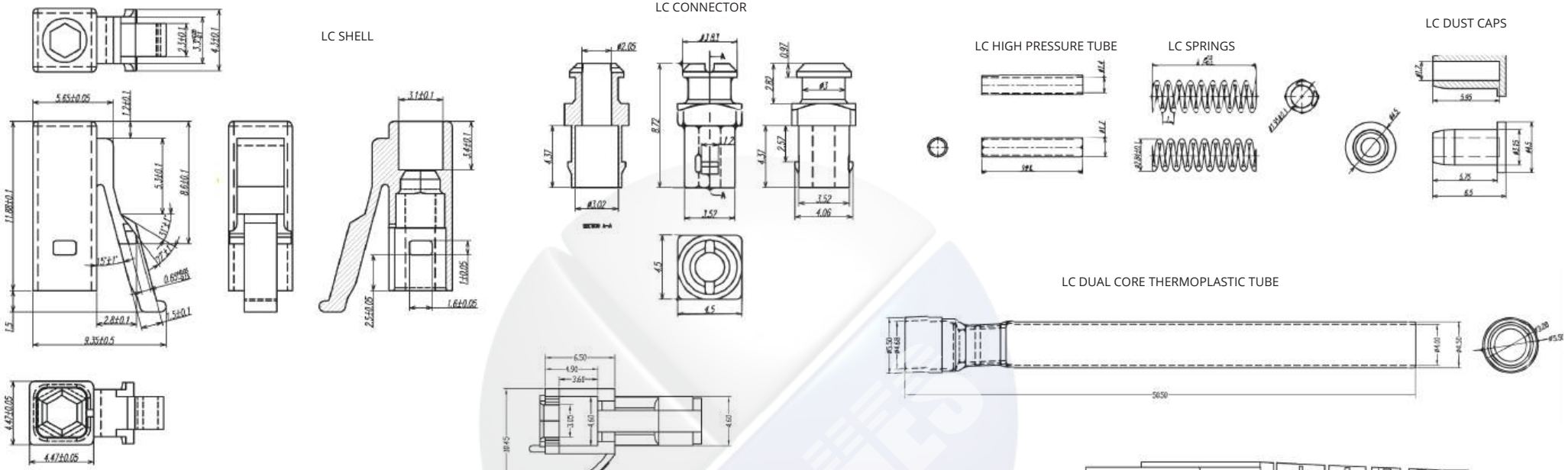

NOTE: THERE SHOULD BE NO PRESSURE, SCRATCHES OR BURNS ON THE SURFACE

HUGHES
Unit G, Southwark Business Centre
Ayres Street, London, SE1 1ES, UK
Tel: (44) 0207 378 1400
Fax (44) 020 7378 1434
www.hugheselectronics.co.uk

Title: LC SM/MM UNIBOOT CONNECTOR

Part no: 15-LCUNISM / 15-LCUNIMM

Date: 28/04/2017 Issue No. 1 Scale: NO

Changes log:

Drawn:	J. S.	_____
Approved:	J. W.	_____
Checked:	L. V.	_____
QA:	G. R.	_____

Compliance: